Card reader

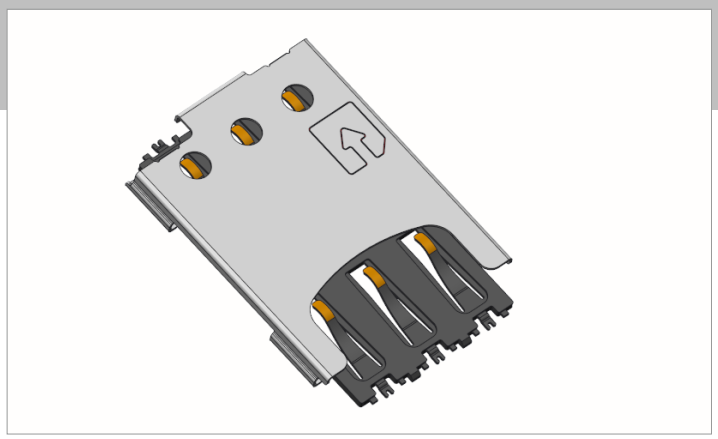

PART #: SSH-Z0500-A00

KEY FEATURES
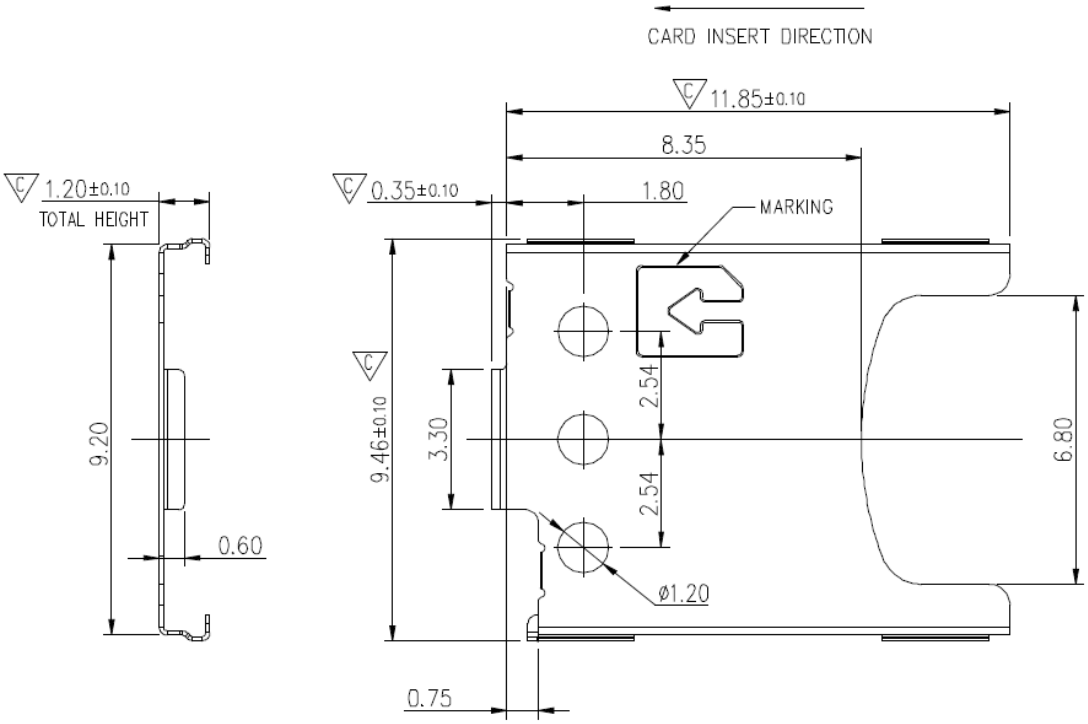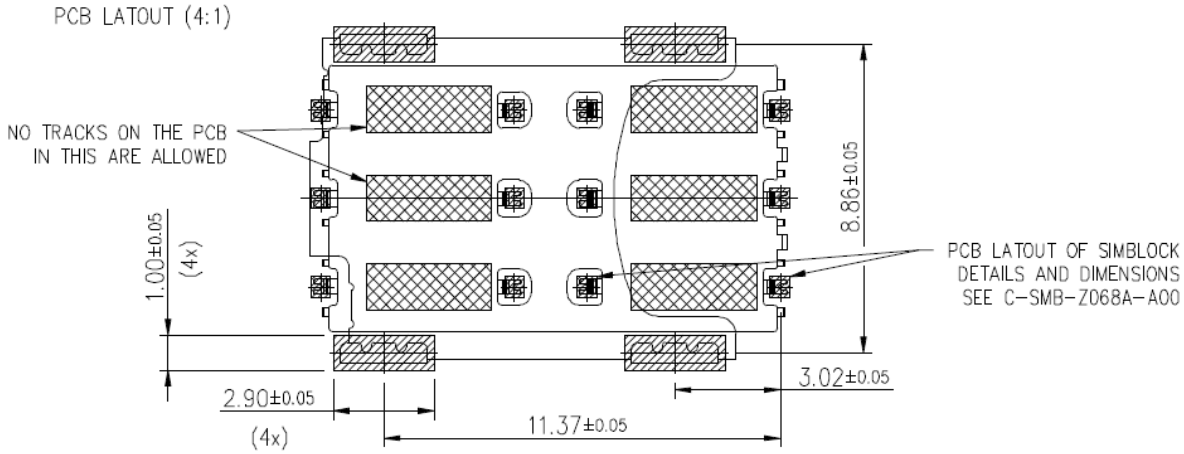
- 12.20Lx9.64Wx1.20H mm
- Nano SIM push pull type
- Mechanical lifetime Min. 1000 mating cycles
- Modular solution