Card reader

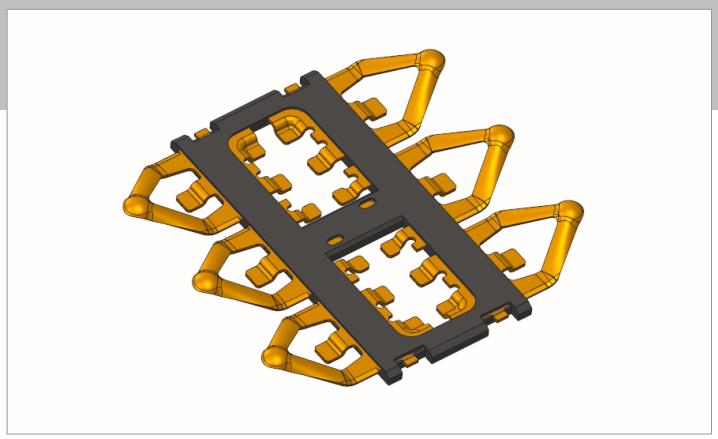

PART #: SMB-Z0630-A00

KEY FEATURES

- 8.00Lx8.64Wx0.90H mm
- Stable contact force
- Contact force : 0.20N min
- Contact with Anti-scratching mechanism

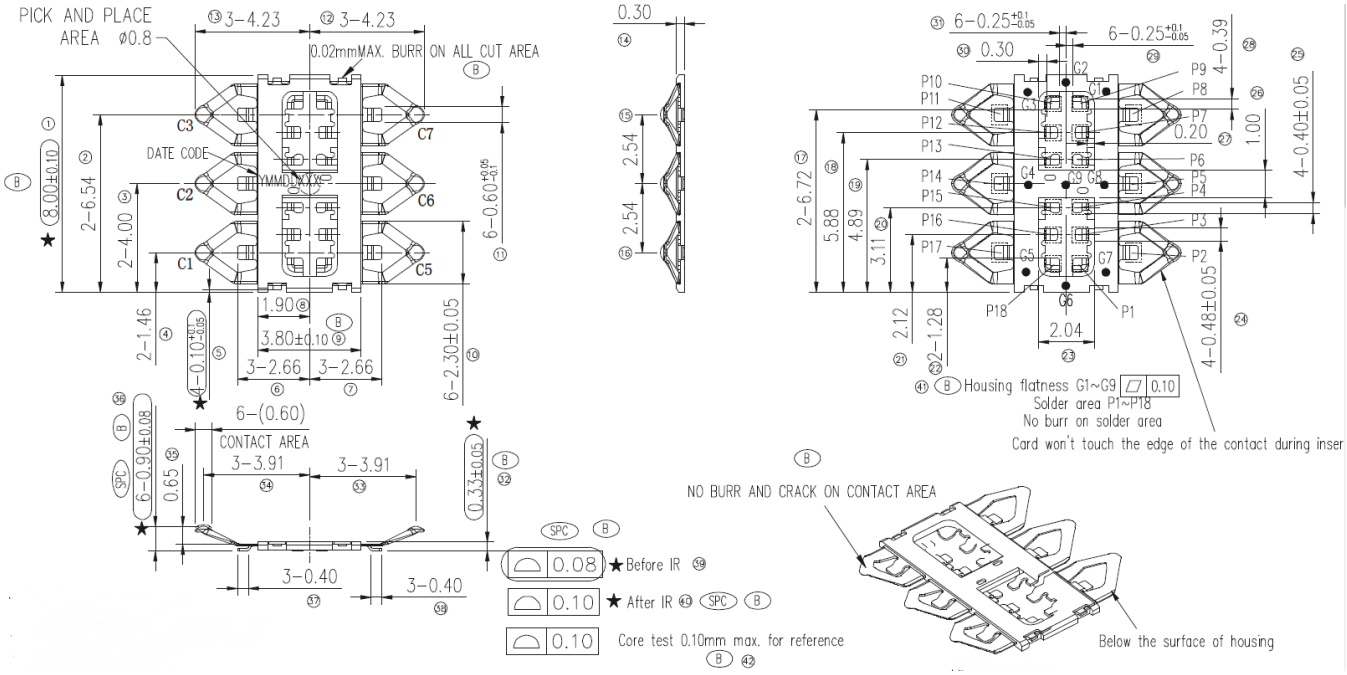

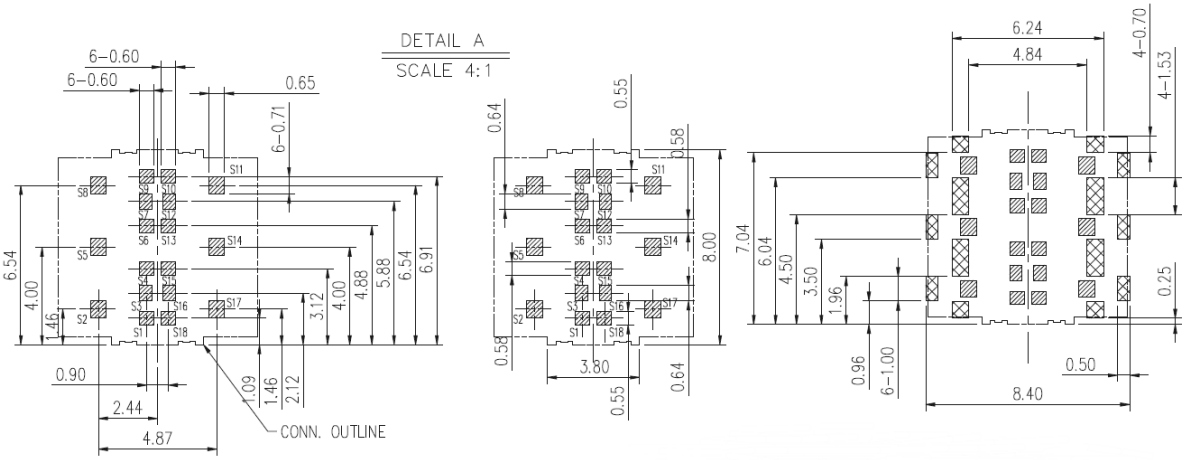

Soldering Pad area

Keep out area
(possibly touch of componets on PCB)

Connector outline

Keep out area
1.Touch area of contact tips,No electrical function and only for mechanical function
2.No first PCB-Layer circuits in the area

Recommend PCB Layout

Recommend tolerance:±0.05