Clip

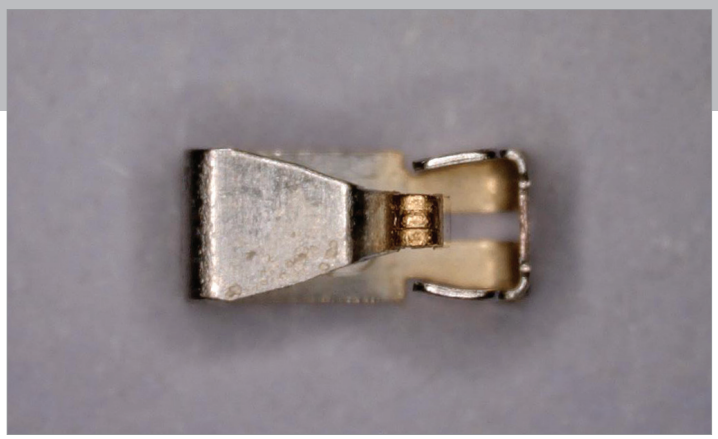

PART #: C504 10M006 726 3

KEY FEATURES
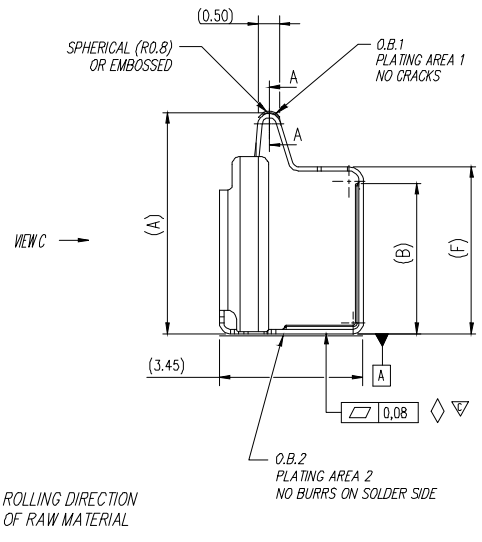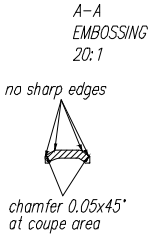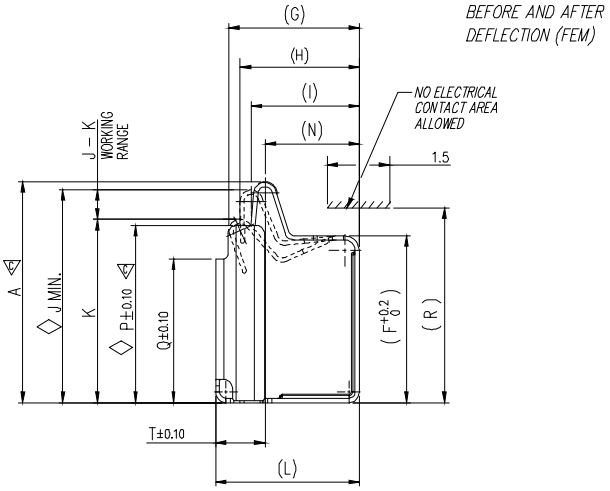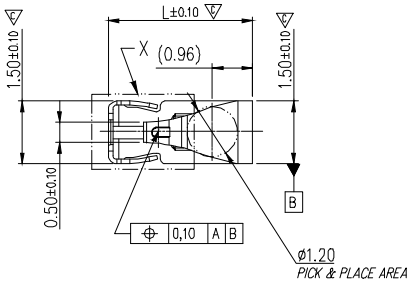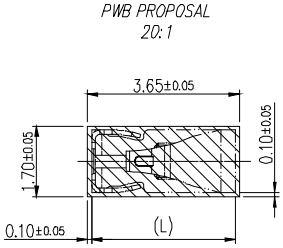
- 3.45L x 1.50W x 2.90H mm
- Forward Contact
- Side Protected