Card Reader

PART #: C707 10M008 610 2

KEY FEATURES
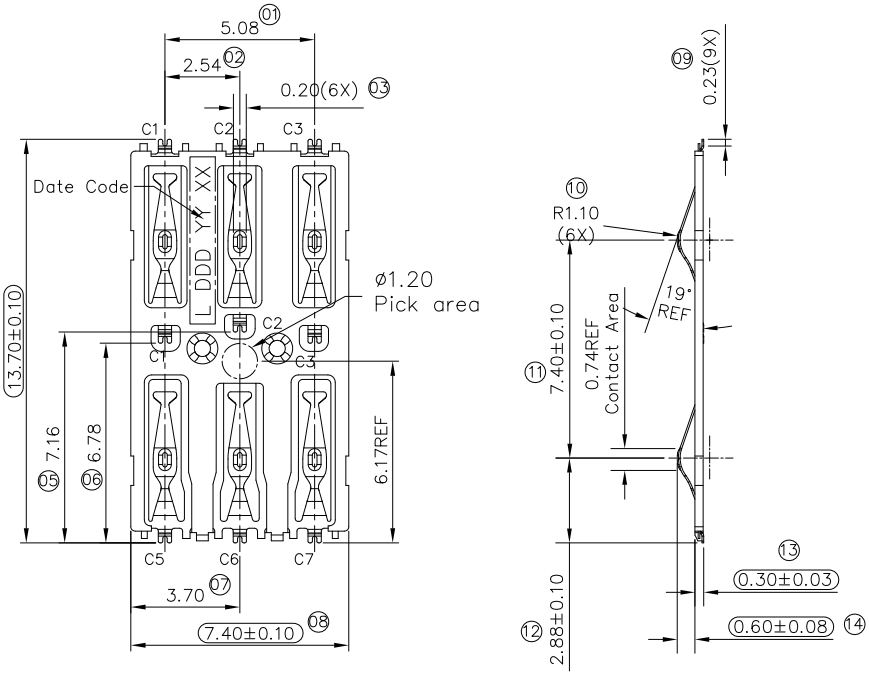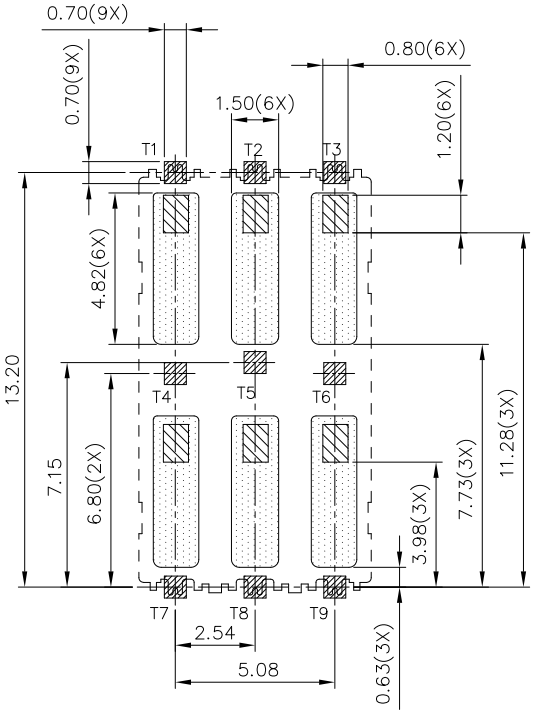
- 13.70L x 7.40W x 0.30H mm
- Stable contact force
- Contacts with anti-scratching mechanism